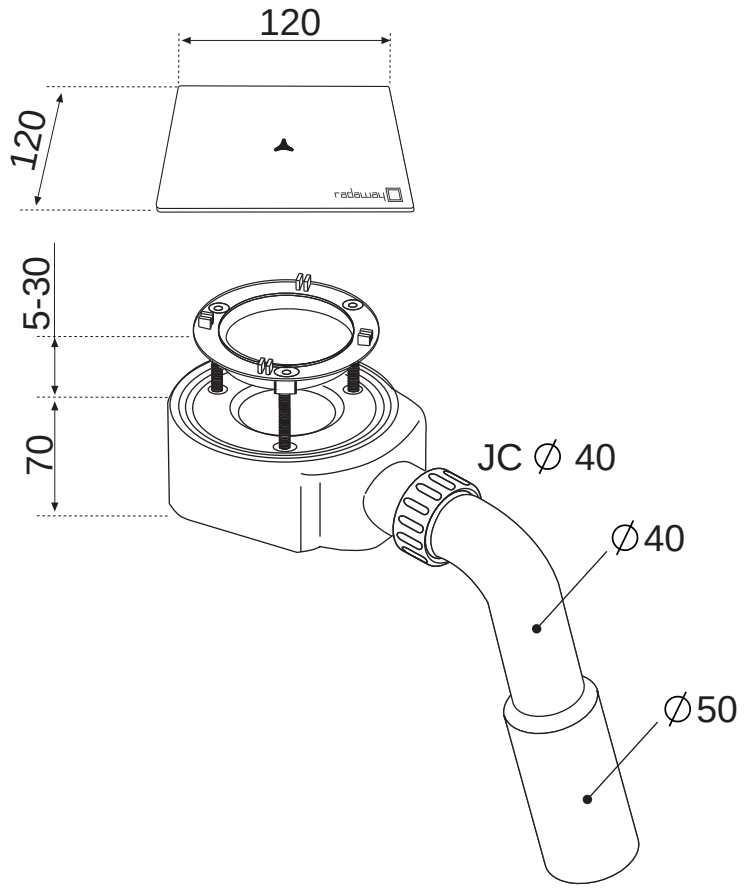R399